IRONERS

118"

SMALL FRAME WITH REMOVABLE FEED TABLE

ONE ROLL 32" GAS

FOR SPEED>52 FPM

T if with delivery table

U without table

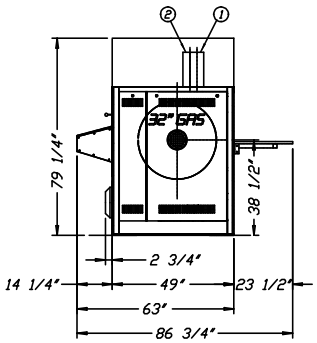

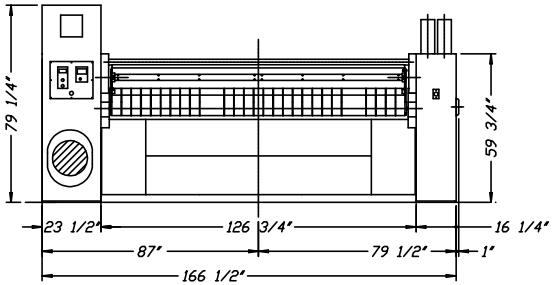

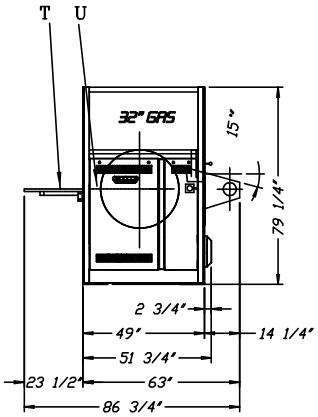

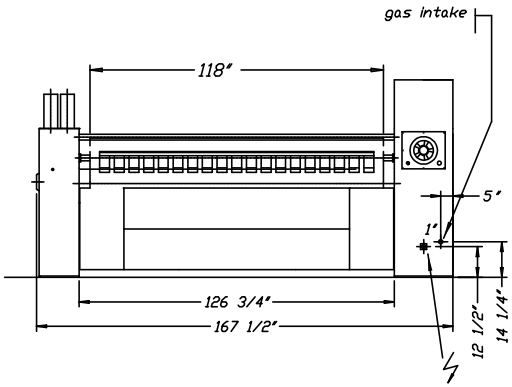

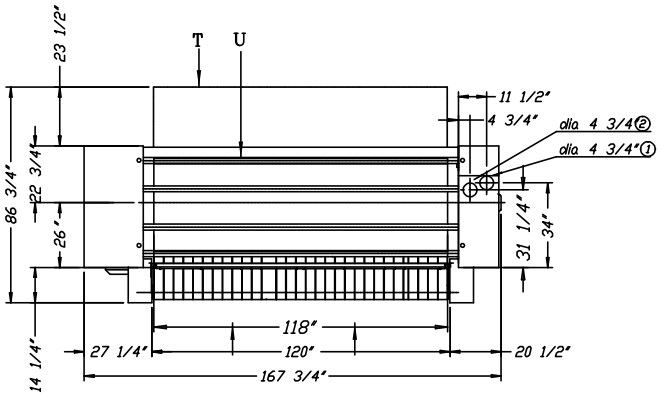

gas inlet		1"
gas exhaust	1	dia 4 3/4"
roll exhaust	2	dia 4 3/4"
drive motor		5 1/2 H.P.
exhaust motor		1 H.P.
pump motor		1/2 H.P.
circulation pump		4 H.P.
electrical		480V/60Hz
main fuses		40 amps

schaal/échelle:

CONFIDENTIAL Wijzigingen voorbehouden - Sous réserve de modifications
Änderungen vorbehalten - Subject to alteration

Belgium	Nr : 4370	Typ :	
	Dat : 22/09/03	Get : frank	